SPECIFICATIONS:

DV-7000 SERIES PUMP

HELI-FLOW™ PUMP

ROTARY POSITIVE DISPLACEMENT WITH MECHANICAL STAND-OFF

The DV-7000 Heli-flow™ pump is a third-generation rotary positive displacement auger pump designed and manufactured by Asymtek. The pump provides fast, reliable dispensing of medium- to high-viscosity fluids and pastes using industry-standard fixed mechanical stand-off nozzles and a floating head. Typical applications include small-dot dispensing of solder paste, surface mount adhesives and silver epoxy.

The DV-7000 pump is designed with roller-bearing slides for all moving parts. These slides reduce friction, increase positional accuracy and allow *light touch* contact with the substrate.

The valve motor is closed-loop servo-controlled with encoder feedback, and can be reversed to create a clean fluid cutoff. And the quick-release cartridge design makes cleaning easy; simply push the quick release lever to remove all wetted parts in a single step. No tools required.

The DV-7000 pump is a proven tool for precise, repeatable dispensing. It meets today's requirements for high-volume production, 24 hours a day, 7 days a week.

NEW PHOTO

FEATURES

- Rotary auger pumping for consistent dot dispensing
- Floating head with a fixed mechanical stand-off nozzle for extremely consistent dots and increased throughput
- Tool-free disassembly and assembly of wetted parts for quick and easy cleaning
- Closed-loop motor control with encoder feedback ensures high repeatability
- Luer-cartridge option allows use of a wide range of standard needles
- Advanced light-weight titanium cartridge and rolling bearings provides *'soft touch'* capability while maximizing strength

NEW PHOTO

Nordson Electronics Systems

Asymtek® A NORDSON COMPANY

HOW IT WORKS

The Heli-flow™ pump design utilizes rotary positive displacement auger technology and a reversible motor with encoder to provide increased dispensing control and accuracy. The pump incorporates two key features that result in a *'soft touch'* to the substrate:

- An advanced system using ball-and-spline drive coupling virtually eliminates axial friction during floating head dispensing operations while maintaining little or no backlash.
- The enclosed, precision roller-bearing slides upon which the floating head runs provide greater accuracy and smoother movement compared to standard cartridge-in-sleeve systems.

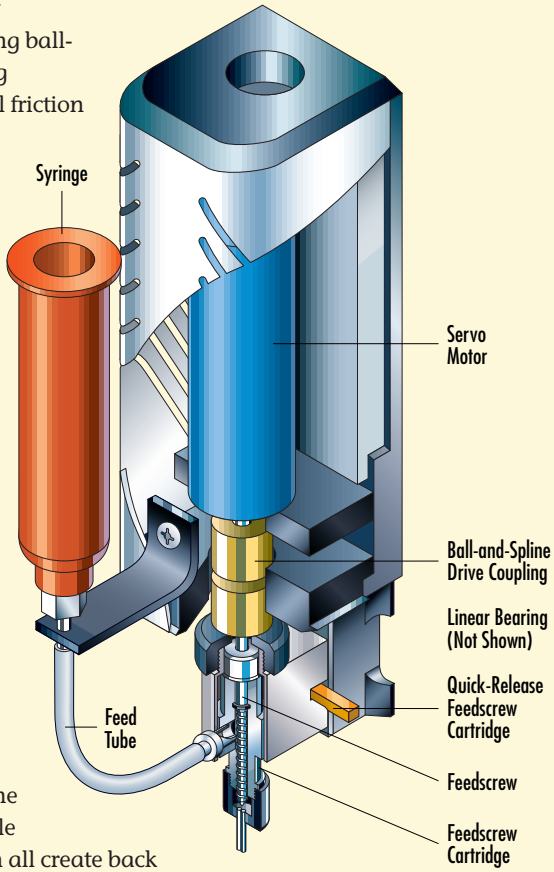

Material is pressure-fed into the valve and the auger as the motor turns the auger and shears the material. This *shear force* drives the material down the threads and through the valve. Fluid viscosity, needle opening, and auger length all create back pressure. The balances between these forces determine the amount of material dispensed.

The patent-pending quick-release mechanism allows quick disassembly and assembly for cleaning and eliminates the need for tool.

DV-7000 SPECIFICATIONS:

Dot size:	< 0.38 mm (.015 in.)
Dimensions:	Length: 190 - 192 mm (7.48 - 7.56 in.) Width: 33 mm (1.3 in.) Depth: 72.6 mm (2.86 in.)
Air Pressure Required:	*When using paste:* 34-103 kPa (5-15 psi) [0.34-1.0 bar] *When using fluid other than paste:* 69-552 kPa (10-80 psi) [0.7-5.5 bar]
Motor:	Closed-loop control with encoder feedback
Motor Life Cycle:	>15 million cycles with no degradation
Maximum Tolerable Board Warpage:	1.58 mm (0.06 in.)
Luer Cartridge Available	

The aluminum surfaces are specially treated to prevent cured adhesives from sticking to surfaces.

Please contact these locations for the name of your local representative.

HEADQUARTERS

2762 Loker Avenue West
Carlsbad, CA 92008-6603 USA
Toll Free: 1-800-ASYMTEK
Tel: (760) 431-1919
Fax: (760) 431-2678
Email: info@asymtek.com

INTERNATIONAL SALES

Amherst, OH: (440) 985-4098
Europe: +31 (0) 43-352-4466
Japan: +81 (0) 3-57622700
Korea: +82-347-766-8321
S.E. Asia: +65 (0) 7782511
Taiwan: +886-2-82001268
Australia: +61 (0) 2-9838-7144

Web Site: www.asymtek.com

Asymtek® A NORDSON COMPANY

Heli-flow™ and Asymtek® are trademarks of Asymtek.

All specifications are believed to be a true and accurate representation of system capabilities and are subject to change without notice.

Contact Asymtek for your specific application requirements.

©1999 Asymtek Printed 10/99

ASL-99-2061 Rev A

Nordson Electronics Systems